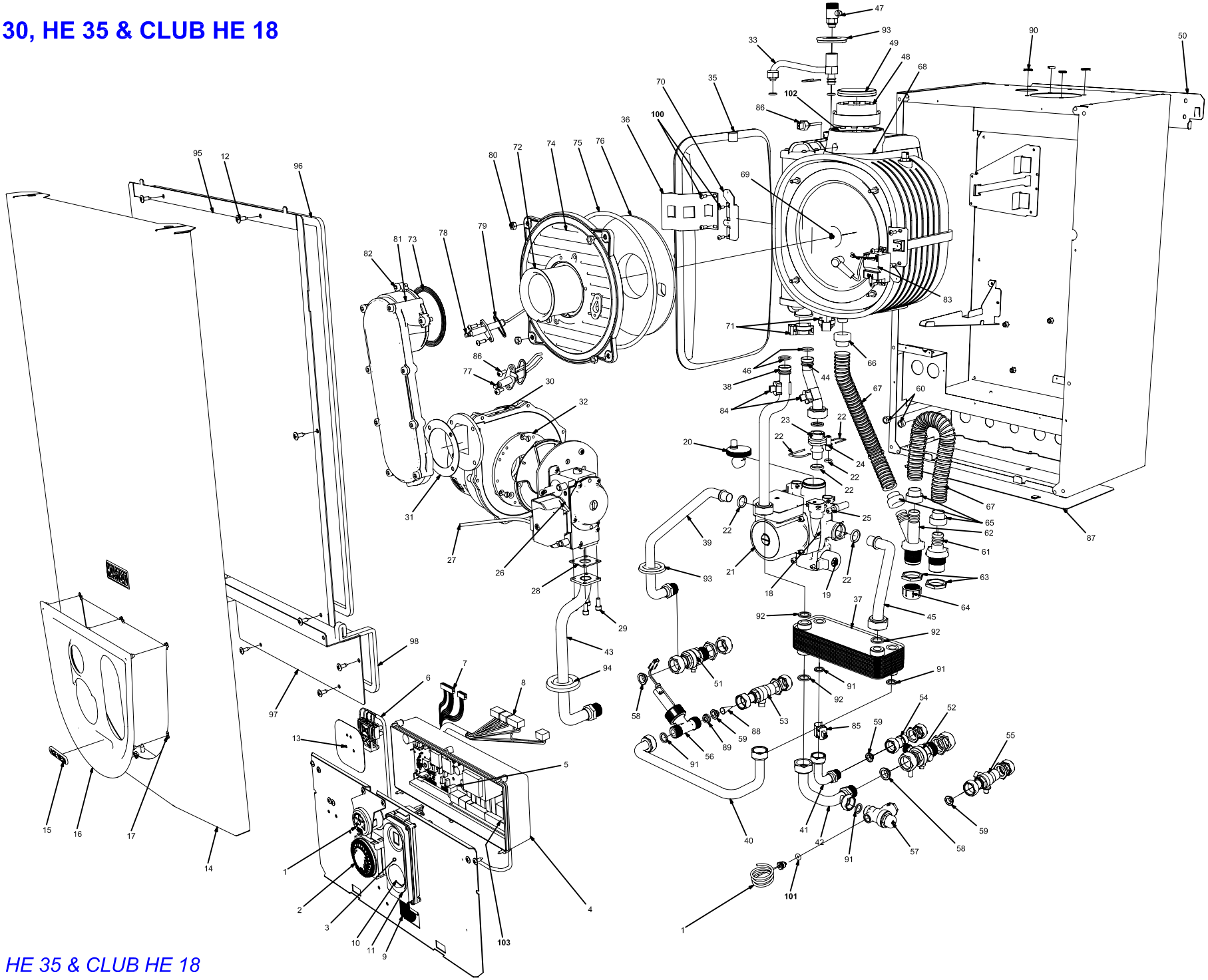ACE HE 24, HE 30, HE 35 & CLUB HE 18